ROUGH IN VALVES
3/4" NPT

Arret encastre 3/4" NPT, Sans Plomb

Ref #: 665302

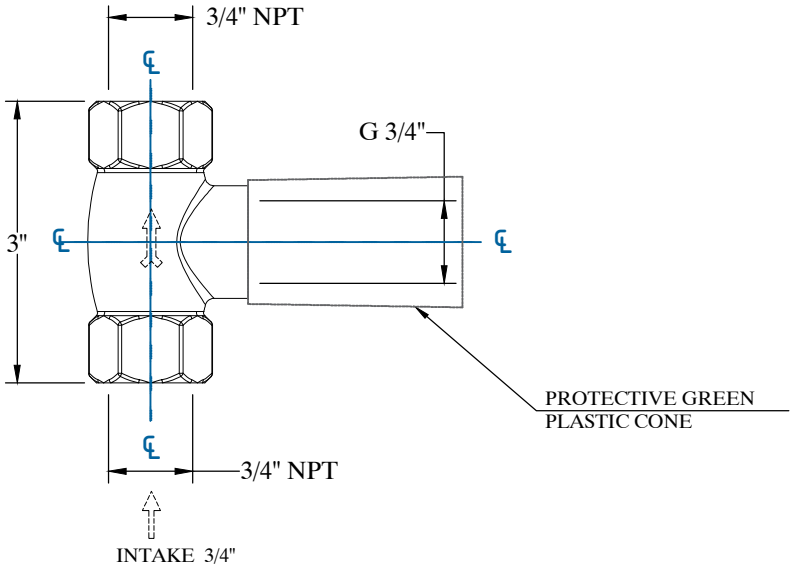

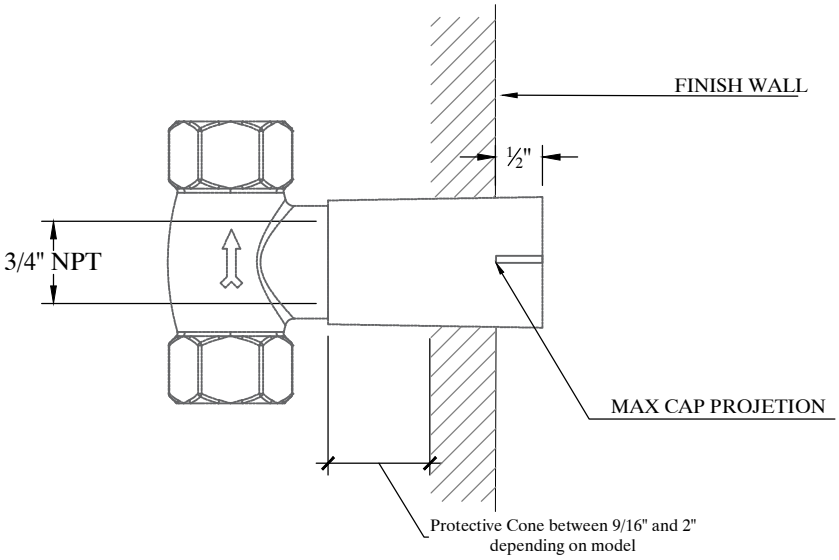

COMPAS™

REVISED: JAN 16, 2023